3890-WSC GB

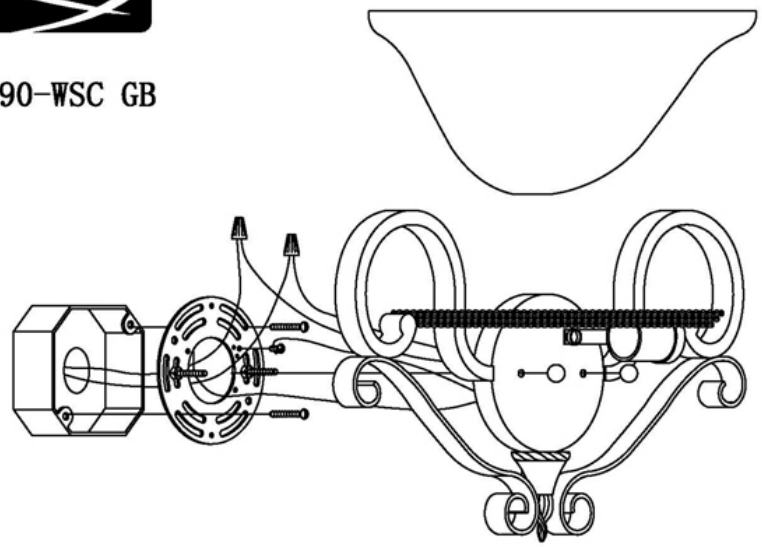

3890-1W GB
3890-2W GB

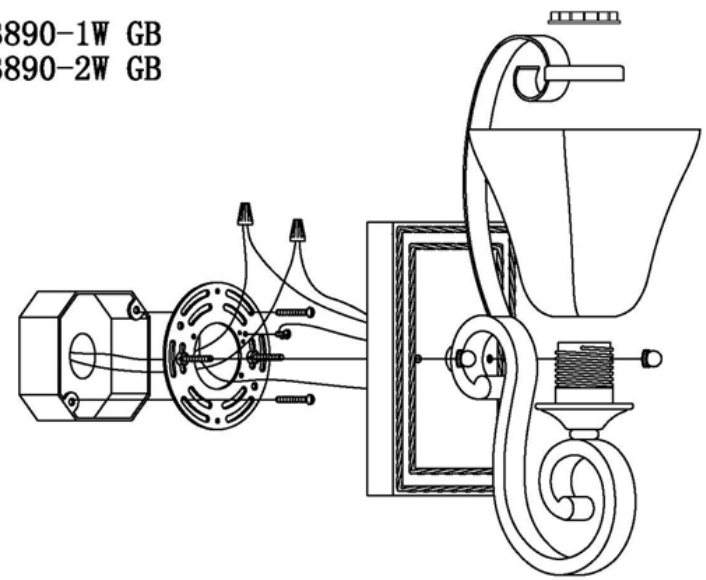

CSA021101WALG1

INSTALLATION INSTRUCTION WM-1

For Wall Mount Light Fixtures

WARNING! SHUT POWER OFF AT FUSE OR CIRCUIT BREAKER

PREPARATION

1. Shut off power at the fuse box or circuit breaker box. If necessary, remove old fixture and all mounting hardware from wall junction box.
2. Carefully unpack your new fixture and lay out all the parts on a clear area. Take care not to lose any small parts Necessary for installation.

MOUNTING THE FIXTURE

3. Your new fixture will be either a Circular Strap (Fig.A) mounting, or a Crossbar (Fig.B) mounting type. Determine which type your fixture is by the parts shipped with your fixture and follow the appropriate instruction.
   NOTE: The wining is the same for either fixture.

Fig. A CIRCULAR STRAP MOUNTING

A1.The Circular Strap (A) contains several pairs of threaded holes, Find the pair of holes that match the hole spacing in your fixture Canopy (D) and thread the two Studs(C) Part Way into the Circular Strap (A).

A2. Place the circular Strap (A) over the junction box so the Studs (C) are vertical or horizontal, as required by fixture Type. Holding the Strap in place, secure to the junction Box by threading the two junction box screws (B) through the slotted holes.

A3. Connect the wires as described under Connecting the wires.

A4. Place the fixture Canopy (D) over the two Studs(C) so they protrude through the holes in the Canopy (D) Thread the Cap nuts (E) onto the Studs(C) and continue turning until the Fixture is snug against the wall. (See) Completing the installation"

Fig. B CROSSBAR MOUNTING

B1.Attach the Crossbar (A) to the junction box with the two junction box screws (B) as shown. The side of the Crossbar marked "GND" must face out.

B2. Thread the Nipple (C) part way into the center hole of the Crossbar.

B3. Connect the wires as described under "Connecting the wires"

B4. Place the fixture Canopy (D) over Nipple so the Nipple Protrudes through the center hole. Holding the fixture in place .thread the Cap nut (E) onto the end of the Nipple until fixture is secure to the wall (See "Completing the Installation")

CONNECTING THE WIRES

Connect the fixture wires to the junction box wires as Shown in the wiring diagram. Make sure all wire connectors are secure and do not easily pull off with a slight tug. If there is no Green Ground wire from the junction box, connect the Fixture Ground Wire to the Circular Strap or the Crossbar with the Green Screw provided.

COMPLETING THE INSTALLATION

4. Install the Glass Shades (F) to the Holders (G) and finger tighten the three set screws per each holder.
5. Install the proper light bulbs for your fixture. DO NOT EXCEED THE SPECIFIED WATTAGE! Turn the power on at the junction box and test the fixture.
6. Your Fixture installation is now complete.

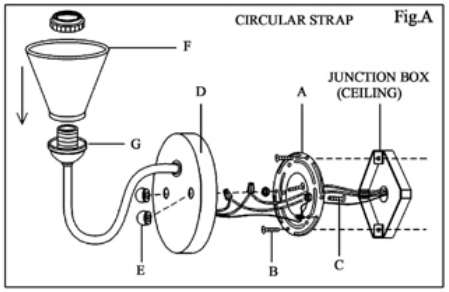

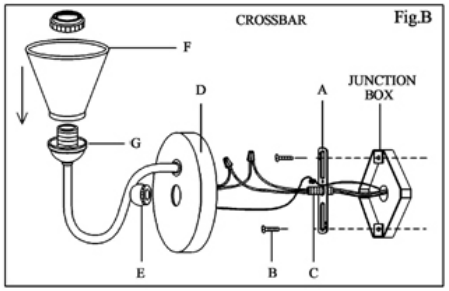

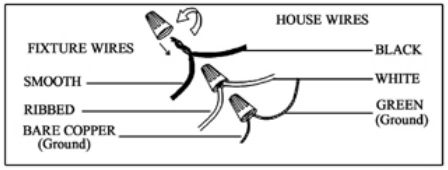

CSKLG002